SONY

DTC-59ES

1/4 inch = 1 inch Scale 4:1

DESCRIPTION: Digital Audio Tape Recorder/Player

DIMENSIONS (WHD): 18 3/8" x 4 1/4" x 13 3/4"

WEIGHT: 17 lbs. 10 oz.

POWER REQUIREMENTS: 120V AC 60Hz

POWER CONSUMPTION: 32 Watts

FRONT VIEW

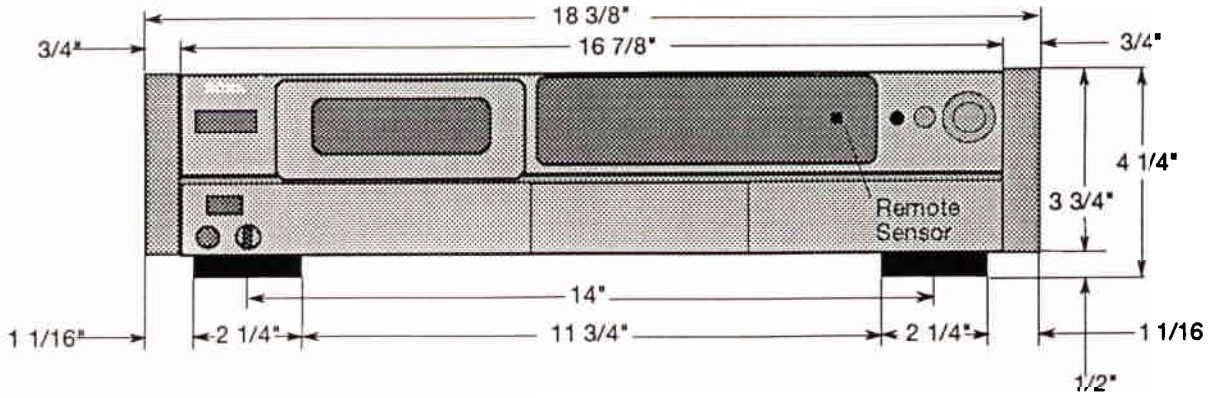

SIDE VIEW

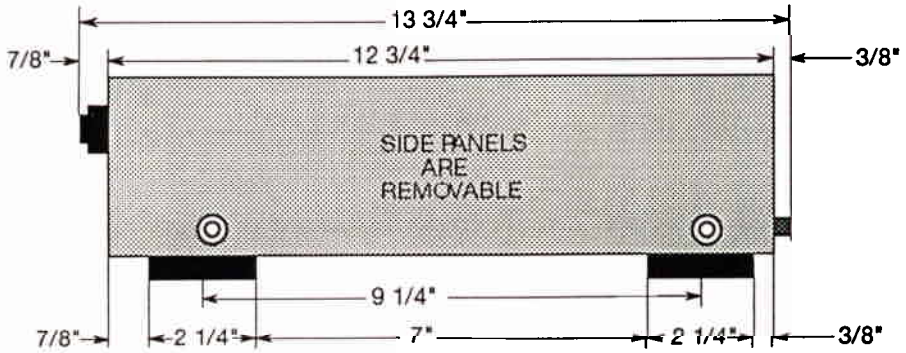

BACK VIEW

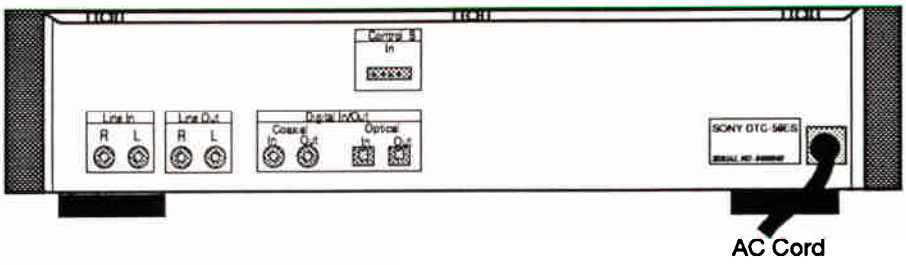

Contractor's Notes:

Sony Corporation of America • Consumer Integrated Systems • Park Ridge, New Jersey 07656 • (201) 930-7614/FAX 930-7891

Features and specifications subject to change without notice. • Non-metric weights and measurements are approximate.